Introduction to Electrical Engineering

Experiment 4 **Common RC Filter Circuits** **Spring 2018**

Filters are used very widely in communication systems to separate different frequencies, and so their behaviour is studied in terms of their **Frequency Response**, which reflects how the ***Gain***, defined to be the ratio of the amplitude of the output signal to that of the input signal, varies with frequency.

In this experiment, we will study three very commonly used filter circuits:
(i) **Lowpass** filter – Gain is maximum at low frequencies, and falls off beyond a Cut-off frequency,
(ii) **Bandpass** filter – Gain falls off on either side of a Centre frequency, and
(iii) **Notch** filter – Gain drops very sharply at a frequency called the Notch frequency.

Lowpass filters are widely used to get rid of unwanted high-frequency disturbances generally referred to as **noise.** Bandpass filters are employed to selectively permit only a narrow band of frequencies to pass through, their most common use being in radio receivers for selecting a chosen radio station. The main utility of Notch filters is to eliminate an undesirable signal having a fixed frequency, the most common application being to eliminate the disturbing 50-Hz signal from sensitive instrumentation systems. These circuits may in general consist of various circuit elements, but we will study circuits consisting of resistors and capacitors only.

A. Lowpass RC Filter

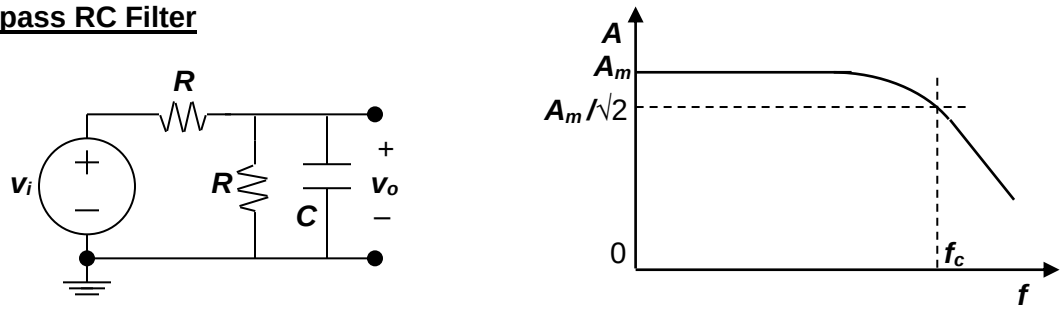

(a) Circuit diagram **(b) Frequency Response**

Fig. 4.1 Lowpass RC Filter

Fig. 4.1(a) shows the circuit of a simple Lowpass RC Filter, where $\boldsymbol{R}$ = 20.0kΩ and $\boldsymbol{C}$ = 0.001 μF**.** The Voltage Gain $\boldsymbol{A} = \boldsymbol{V_{om}}/\boldsymbol{V_{im}}$, where $\boldsymbol{V_{im}}$ and $\boldsymbol{V_{om}}$ are the amplitudes of the input and output voltages $\boldsymbol{v_i}$ and $\boldsymbol{v_o}$ respectively. The Frequency Response given in **Fig. 4.1(b)** indicates that $\boldsymbol{A}$ remains constant at a value $\boldsymbol{A_m}$ at low frequencies, and falls off as frequency increases. The frequency $\boldsymbol{f_c}$, at which $\boldsymbol{A} = \boldsymbol{A_m}/\sqrt{2}$ is called the **Cut-off Frequency**. The theoretically expected values are: $\boldsymbol{A_m}$ = 0.5 and $\boldsymbol{f_c} = 1/(\pi \boldsymbol{RC})$.

1. Set up the circuit given in **Fig. 4.1(a)**, with the input voltage $\boldsymbol{v_i}$ applied from the WAVEGEN, and connect $\boldsymbol{v_i}$ and the output voltage $\boldsymbol{v_o}$ to channels 1 and 2 of the DSO. Set the WAVEGEN for 1kHz **sinusoidal** wave output with peak-to-peak value 2V and zero offset. Choosing WAVEGEN as the **trigger** source, display 2-3 cycles of the waveforms by adjusting the **time base**.

2. Change the mode of the DSO to ***x-y*** and note that the graph displayed on the screen is a straight line, and hence the slope of the line will give the value of the Gain $\boldsymbol{A}$. Verify that the straight line remains unchanged at frequencies 500Hz and 2kHz, indicating that the Gain $\boldsymbol{A}$ is constant and thus equal to $\boldsymbol{A_m}$. Find the value of $\boldsymbol{A_m}$ by measuring the slope of the straight line.

3. Increase the frequency gradually until the display starts becoming elliptical in shape, indicating that $\boldsymbol{v_o}$ is no longer in phase with $\boldsymbol{v_i}$. Change the display mode of the DSO to ***y-t*** and set up the **Measurement** option of the DSO to measure the peak-to-peak values of $\boldsymbol{v_o}$ and $\boldsymbol{v_s}$. Observe that the amplitude of $\boldsymbol{v_o}$ and hence the value of Gain $\boldsymbol{A}$ decreases as frequency is increased. Determine the cut-off frequency $\boldsymbol{f_c}$ where $\boldsymbol{A} = \boldsymbol{A_m}/\sqrt{2}$ ($\approx 0.7\boldsymbol{A_m}$). Note that as long as the peak-to-peak value of the input voltage $\boldsymbol{v_s}$ remains 2V, $\boldsymbol{A}$ is directly given by the amplitude of the output voltage $\boldsymbol{v_o}$. Calculate the theoretically expected value of $\boldsymbol{f_c}$ and compare it with the measured value.

B. Bandpass RC Filter

The circuit diagram of a simple Band-pass RC Filter and its frequency response are shown in **Fig. 4.2**. The Frequency Response shown in **Fig. 4.2(b)** indicates that the Voltage Gain $\boldsymbol{A}$ has a maximum value $\boldsymbol{A_m}$ at a Centre Frequency $\boldsymbol{f_0}$, and falls off both at lower and at higher frequencies. The theoretical values of $\boldsymbol{f_0}$ and the Voltage Gain $\boldsymbol{A_m}$ at $\boldsymbol{f_0}$ are given by: $\boldsymbol{f_0} = 1/(2\pi \boldsymbol{RC})$ and $\boldsymbol{A_m} = 1/3$.

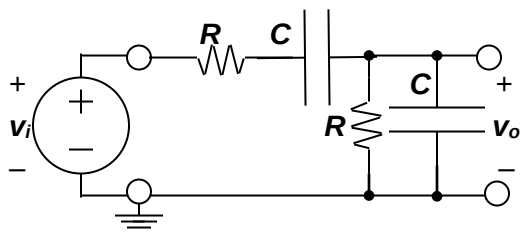

(a) Circuit diagram

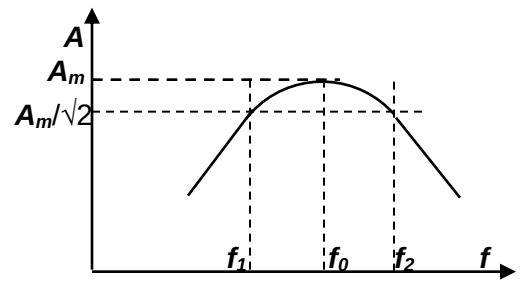

(b) Frequency Response

Fig. 4.2 Bandpass RC Filter

1. Set up the circuit given in **Fig. 4.2(a)**, with $\boldsymbol{R}$ = 15.0kΩ, C = 0.001μF.
2. Repeat the WAVEGEN and DSO settings used in step **A.1**.
3. Change the mode of the DSO to ***x-y*** and note that the graph displayed on the screen is elliptical in shape, indicating that there is a phase difference between $\boldsymbol{v_i}$ and $\boldsymbol{v_o}$. Increase the frequency gradually until the display becomes a straight line, indicating that $\boldsymbol{v_o}$ is in phase with $\boldsymbol{v_i}$. Note the frequency and find the value of the Voltage Gain by measuring the slope of the straight line.
4. Change the display mode of the DSO to ***y-t*** and set up the **Measurement** option of the DSO to measure the peak-to-peak values of $\boldsymbol{v_o}$ and $\boldsymbol{v_s}$. Note that the amplitude of $\boldsymbol{v_o}$ and hence the Gain $\boldsymbol{A}$ decreases if frequency is changed either way. The frequency and the Voltage Gain found out in the previous step therefore give the Centre Frequency $\boldsymbol{f_c}$ and the Centre-frequency Gain $\boldsymbol{A_m}$.
5. Vary the frequency and determine the lower cut-off frequency $\boldsymbol{f_1}$ and the upper cut-off frequency $\boldsymbol{f_2}$ where $\boldsymbol{A} = \boldsymbol{A_m}/\sqrt{2}$ ($\approx 0.7\boldsymbol{A_m}$). $\boldsymbol{f_2} - \boldsymbol{f_1}$ gives the Bandwidth of the Bandpass filter.
6. Apply a 10kHz triangular waveform from the WAVEGEN as $\boldsymbol{v_s}$ and sketch the waveform of the output voltage $\boldsymbol{v_o}$. Compare the waveform with a sinusoidal waveform.

C. RC Notch Filter

1. Assemble the **Notch** filter circuit given in **Fig. 4.3**, with $\boldsymbol{R}$ = 33.0kΩ and C = 0.1μF. The resistance $\boldsymbol{R}/2$ is obtained by connecting two $\boldsymbol{R}$'s in parallel, and the capacitance $2\boldsymbol{C}$, by connecting two $\boldsymbol{C}$'s in parallel. Repeat the WAVEGEN and DSO settings used in step **A.1**, with frequency = 45Hz.

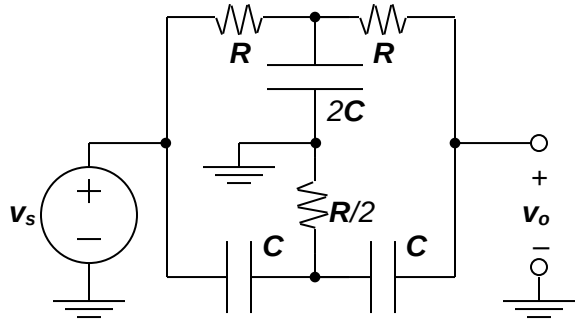

Fig. 4.3 Twin-Tee Notch Filter

2. With the DSO in the ***y-t*** mode, set up the **Measurement** option of the DSO to measure the peak-to-peak values of $\boldsymbol{v_o}$ and $\boldsymbol{v_s}$. Increase the frequency gradually and note the gradual decrease in the amplitude of $\boldsymbol{v_o}$ and hence in the Gain $\boldsymbol{A}$.
3. Find out the frequency (close to 50Hz) where $\boldsymbol{v_o}$ drops very sharply to a minimum amplitude. This is the centre frequency of the Notch filter. The theoretical value of the Gain $\boldsymbol{A_m}$ at this frequency is **zero**, and is too small to be measured properly.
4. Remove the WAVEGEN connection and connect a wire instead to the input. Touch the free end of the wire with your finger and sketch the noisy waveforms at the input and output of the filter. Recognise how the 50Hz signal is filtered out and only the high-frequency noise passes through the filter. Note the effect of putting one of your feet without shoes on ground while touching the wire.